REV.	DATE	DESCRIPTION

FEATURES

- ETHERNET TRANSFORMER ACCORDING TO IEEE 802.3at (PoE PLUS) FOR PSE APPLICATIONS
- MEETS THE STANDARDS OF EIA-364, FCC PART 68, AND IEC 60512-1-100.
- CAPABLE OF 10/100/1000 BASE-TX
- SUPPORT POWER UP TO 30W
- FULLY PARAMETRIC, HI-POT, AND DC TESTED MODULES WITH EXCELLENT EMI FILTERING
- COMPLIANCE TO J-STD-020 : LEVEL 1, NO SENSITIVE MOISTURE

ELECTRICAL CHARACTERISTICS AT +25°C (UNLESS OTHERWISE SPECIFIED)

1. OCL : 350uH MINIMUM AT 100MHz, 100mV, 8mA DC BIAS
2. INSERTION LOSS : -1.2dB MAXIMUM AT 100KHZ-100MHz
3. RETURN LOSS : -18dB MINIMUM AT 1-30 MHz
   -13dB MINIMUM AT 30-60 MHz
   -12dB MINIMUM AT 60-80 MHz
4. COMMON MODE REJECTION : -30dB MINIMUM AT 1-100 MHz
5. CROSS TALK : -30dB MINIMUM AT 1-100 MHz
6. ISOLATION VOLTAGE : 1,500 V/AC (INPUT OR OUTPUT)
7. STORAGE TEMPERATURE : -40°C TO +85°C
8. OPERATING TEMPERATURE : -40°C TO +85°C
9. ACCORDING TO IEEE 802.3 FOR PSE (30WATTS) APPLICATIONS
   DC CURRENT CAPABILITY UP TO 720mA AT 57VDC (CONTINUOUS)

LED SPECIFICATION

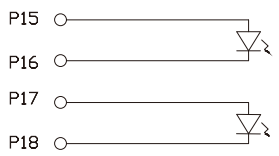

PIN	YELLOW	PIN	GREEN
P15	+	P17	+
P16	-	P18	-

RoHS COMPLIANT AND MEET THE REQUIREMENTS DEFINED UNDER DIRECTIVE 2011/65/EU OF THE EUROPEAN PARLIAMENT AND OF THE COUNCIL OF JUNE 8TH, 2011 ON THE RESTRICTION OF THE USE OF CERTAIN HAZARDOUS SUBSTANCES IN ELECTRICAL AND ELECTRONIC EQUIPMENT (EEE).

SCHEMATIC

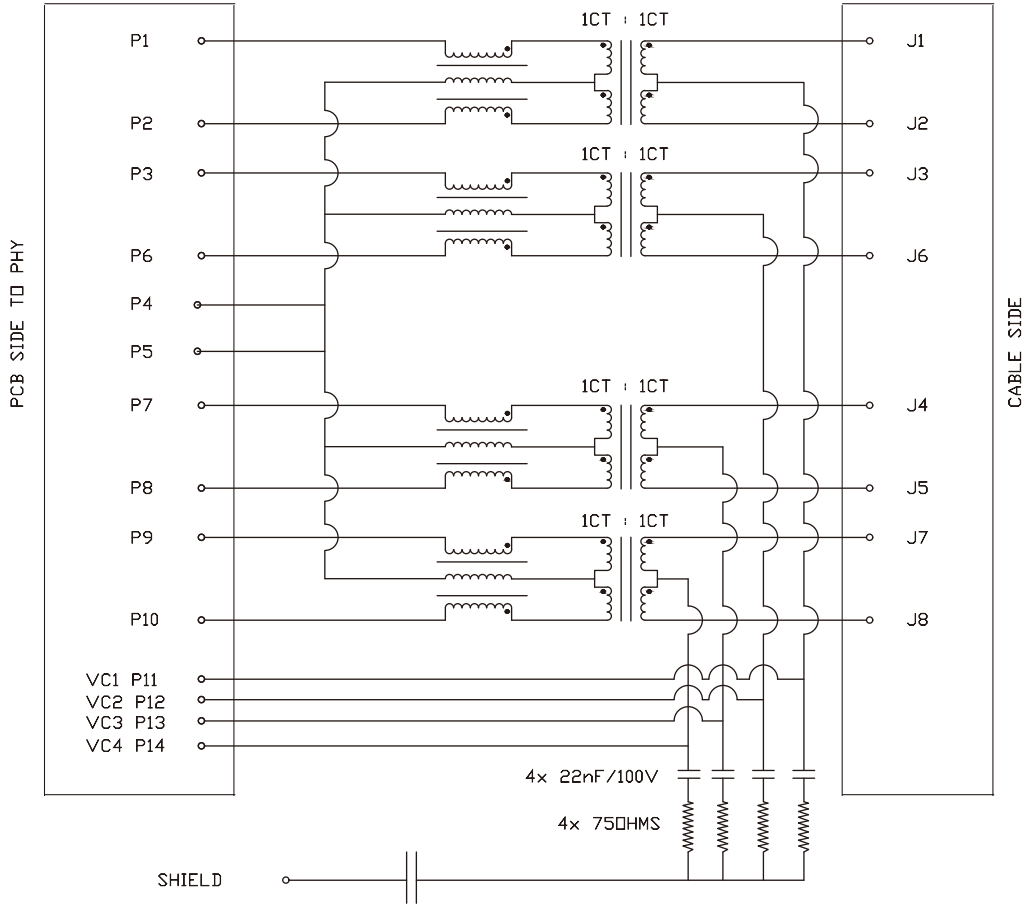

QUALITY CONTROLLING DIMENSION WILL MARKED THE SYMBOL AS ◄	METRIC	WIROS ELECTRONICS INTERNATIONAL COMPANY LIMITED
	DRAWER: LUCY, L APPROVER: YUCAI, Y	NOTICE OF PROPRIETARY PROPERTY THIS DRAWING CONTAINS INFORMATION THAT IS PROPRIETARY TO WIROS ELECTRONICS INTERNATIONAL COMPANY LIMITED. AND SHOULD NOT BE USED WITHOUT WRITTEN CONSENT FROM WIROS.
RoHS COMPLIANTS / HF HALOGEN FREE / LEAD FREE	DIMENSIONS ARE IN MILLIMETERS TOLERANCES 0~10 ±0.15 10~20 ±0.25 20~40 ±0.25 40~70 ±0.30 70+ ±0.40 ANGLES ±3° DO NOT SCALE DRAWINGS	TITLE LED(Y)(G) 1G1P THT16 POE+ MODULAR ETHERNET RECEPTACLE CONNECTOR
	THIRD ANGLE PROJECTION	PRODUCT NUMBER SPCA1-51×T016PD-F11S04N
	SIZE A4 / REV.	SCALE 1 : 1 / SHEET 1 OF 3

REV. DATE	DESCRIPTION
20/07/30	ADD DIMENSION

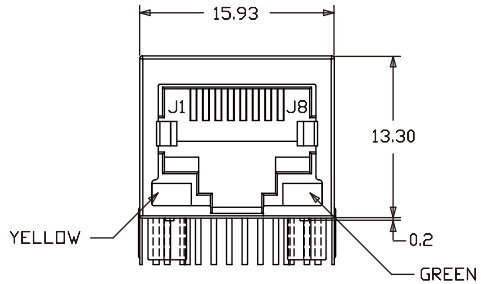

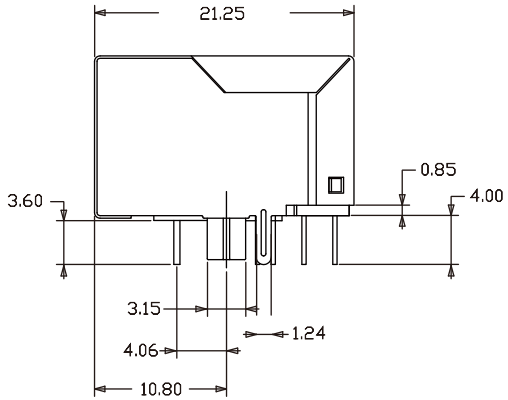

(TOP VIEW)

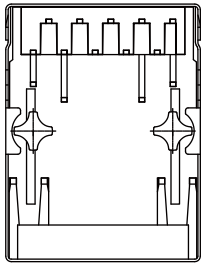

(BOTTOM VIEW)

NOTES (UNLESS OTHERWISE SPECIFIED)

1. HOUSING : THERMOPLASTIC NYLON 6/6, UL94V-0, BLACK
2. CONTACT : PHOSPHOR BRONZE T=0.35mm WITH SELECTIVE GOLD PLATING ON CONTACT AREA
   TIN UNDER-PLATED OVERALL
3. SHIELD : COPPER ALLOY WITH NICKEL PLATED OVERALL
4. LED TERMINAL(S) : PHOSPHOR BRONZE, TIN PLATED
5. DURABILITY : 750 MATING/UNMATING CYCLES MINIMUM
6. WAVE SOLDERING PEAK TEMPERATURE : 260±5°C FOR 3-5 SECONDS MAXIMUM

MARKING

1. LOGO : "WIROS"
2. MPN : SPCA1
3. DATECODE : YYWW

QUALITY CONTROLLING DIMENSION WILL MARKED THE SYMBOL AS ◄

METRIC

DRAWER: LUCY, L

APPROVER: YUCAI, Y

DIMENSIONS ARE IN MILLIMETERS
TOLERANCES

0~10	±0.15
10~20	±0.25
20~40	±0.25
40~70	±0.30
70+	±0.40
ANGLES	±3°

DO NOT SCALE DRAWINGS

THIRD ANGLE PROJECTION

RoHS COMPLIANTS

HF HALOGEN FREE

LEAD FREE

WIROS ELECTRONICS
INTERNATIONAL COMPANY LIMITED

NOTICE OF PROPRIETARY PROPERTY
THIS DRAWING CONTAINS INFORMATION THAT IS PROPRIETARY TO WIROS ELECTRONICS INTERNATIONAL COMPANY LIMITED. AND SHOULD NOT BE USED WITHOUT WRITTEN CONSENT FROM WIROS.

TITLE

LED(Y)(G) 1G1P THT16 POE+
MODULAR ETHERNET
RECEPTACLE CONNECTOR

PRODUCT NUMBER: SPCA1-51×T016PD-F11S04N

SIZE: A4 | REV. | SCALE: 1 : 1 | SHEET 2 OF 3

REV.	DATE	DESCRIPTION

RECOMMENDED PRINTED CIRCUIT BOARD (PCB) LAYOUT

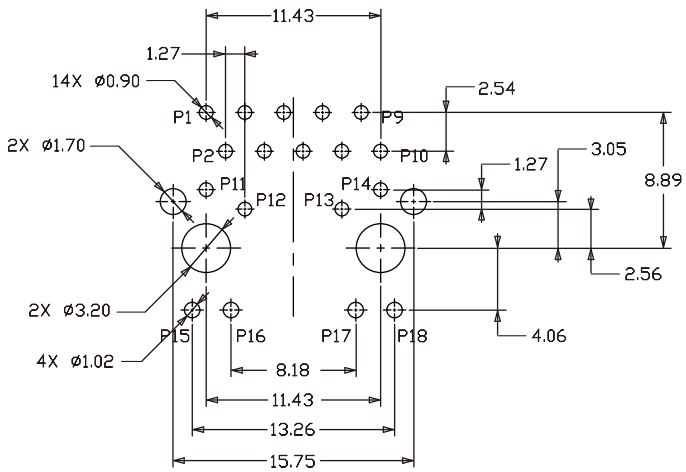

(COMPONENT SIDE VIEW)
TOLERANCE ±0.05mm MAXIMUM

ORDER GUIDE

SPCA1-51 ☒ T016PD-F11S04N

PLATING METHOD
1~GOLD 3μ ON CONTACT AREA
2~GOLD 6μ ON CONTACT AREA
4~GOLD 15μ ON CONTACT AREA
6~GOLD 30μ ON CONTACT AREA

QUALITY CONTROLLING DIMENSION WILL MARKED THE SYMBOL AS ◄

METRIC

DRAWER: LUCY, L
APPROVER: YUCAI, Y

WIROS ELECTRONICS
INTERNATIONAL COMPANY LIMITED

NOTICE OF PROPRIETARY PROPERTY
THIS DRAWING CONTAINS INFORMATION THAT IS PROPRIETARY TO WIROS ELECTRONICS INTERNATIONAL COMPANY LIMITED. AND SHOULD NOT BE USED WITHOUT WRITTEN CONSENT FROM WIROS.

DIMENSIONS ARE IN MILLIMETERS
TOLERANCES

0~10	±0.15
10~20	±0.25
20~40	±0.25
40~70	±0.30
70+	±0.40
ANGLES	±3°

DO NOT SCALE DRAWINGS

THIRD ANGLE PROJECTION

RoHS COMPLIANTS
HF HALOGEN FREE
LEAD FREE

TITLE
LED(Y)(G) 1G1P THT16 POE+
MODULAR ETHERNET
RECEPTACLE CONNECTOR

PRODUCT NUMBER
SPCA1-51×T016PD-F11S04N

SIZE	REV.	SCALE	SHEET
A4		1 : 1	3 OF 3