NOTES

MECHANICAL

1. HOUSING : THERMOPLASTIC P.B.T.+30% GALSS FILLED UL94V-0
2. CONTACT : BRASS

SPECIFICATION

1. CURRENT RATING : 3 AMPHERES
2. WITHSTANDING VOLTAGE : AC 1000V
3. INSULATION RESISTANCE : 1000MΩ MIN.
4. CONTACT RESISTANCE : 20mΩ MAX.
5. OPERATION TEMPERATURE : -40°C ~ +85°C
6. WAVE SOLDERING PEAK-TEMPERATURE : 230°C FOR 5 SECONDS

ORDER OPTION

RHD ** -61 * T1X ** P6

POSITION NO.

PLATING
0~Au 0.2~1μ ON CONTACT AREA
1~Au 3μ ON CONTACT AREA
4~Au 15μ ON CONTACT AREA

DIMENSION OPTION
A2~DIM.H=4.3, DIM.T=2.3
A3~DIM.H=4.6, DIM.T=2.3
A6~DIM.H=7.1, DIM.T=3.0
A7~DIM.H=8.0, DIM.T=3.0
A9~DIM.H=8.5, DIM.T=3.0

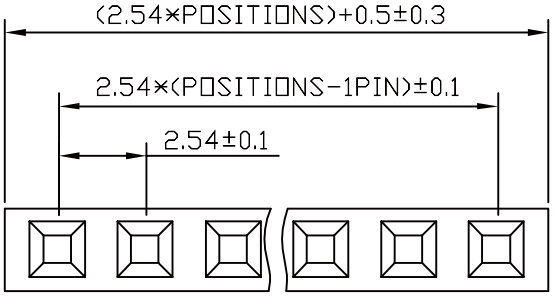

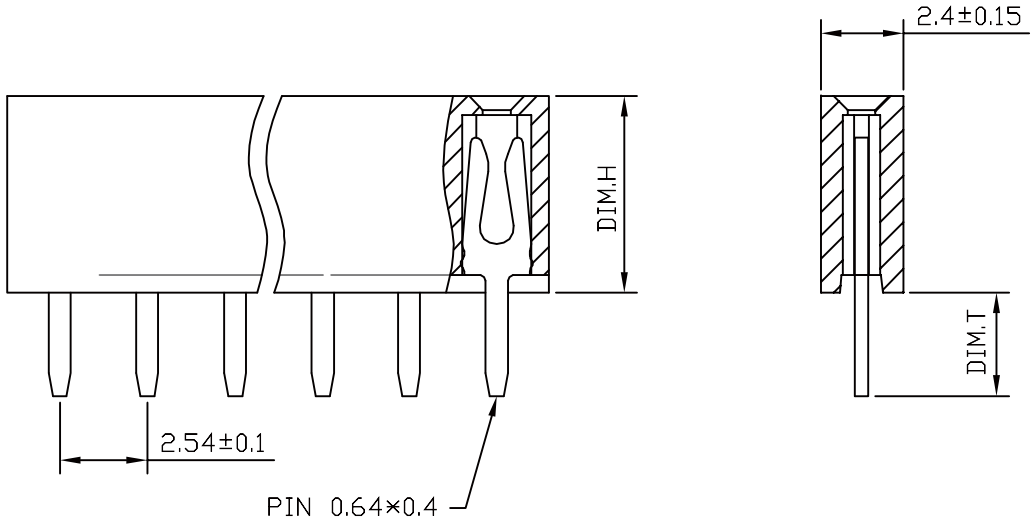

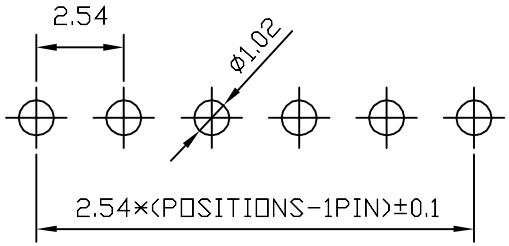

RECOMMENDED P.C.B. LAYOUT

QUALITY CONTROLLING DIMENSION WILL MARKED THE SYMBOL AS	METRIC	WIROS Electronics Int'l CO., Ltd.
	DRAWER: PING, LI	NOTICE OF PROPRIETARY PROPERTY: THIS DRAWING CONTAINS INFORMATION THAT IS PROPRIETARY TO WIROS ELECTRONICS INTERNATIONAL COMPANY LIMITED. ANDSHOULD NOT BE USED WITHOUT WIROS'S WRITTEN CONSENT.
	APPROVER: SKY, WANG	
RoHS COMPLIANTS / HF HALOGEN FREE / LEAD FREE	DIMENSIONS ARE IN MILLIMETERS TOLERANCES X. ---- X.X ±0.35 X.XX ±0.25 X.XXX ±0.15 ANGLES ±3° DO NOT SCALE DRAWINGS	TITLE: 2.54mm FEMALE HEADER, THT
	THIRD ANGLE PROJECTION	PRODUCT NUMBER: RHD**-61*T1X**P6
	SIZE: A4 / REV.	SCALE: NONE / SHEET 1 OF 1

WIROS ELECTRONICS (BRUNEI) DOCUMENT CONTROL CENTER
DCT0001 REV. 1.0 2015 CREATED BY PLD DEPARTMENT